Reddy R 75

Form #M8514R
H-60

4-7	M6658	Detector switch	1
4-8	M6679	Shield	1
-	STP2-3	. Screw	2
4-9	M6613	Igniter access door	1
-	RF3-5	. Screw, Slotted hd. No. 10-32 x 5/8 in.	1
-	WLI-3	. Lockwasher, No. 10 int. tooth	1
4-10	M8035	Igniter assembly	1
4-11	M8579	Terminal box cover	1
-	ST2-4	. Screw	2
-	WLI-2	. Lockwasher	2
4-12	M6578	Terminal block	1
-	RC2-10	. Screw, Rd. hd, mach, No. 8-32 x 1-1/4 in.	2
-	NLC-2	. Nut, Flexloc No. 8-32	2
4-13	M3530	Rubber grommet	2
4-14	M8533	Extension cord assembly	1
4-15	M6916	Bushing (strain reliever)	1
4-16	M8508	Control mounting strap	1
4-17	M8576	Fuel regulator assembly	1
4-18	M8577	Connector	1
-	M8515	Control assembly	1
4-19	M8512	Cover	1
-	ST2-4	. Screw	2
-	WLI-2	. Lockwasher	2
4-20	M5727	Switch	1
-	ST2-4	. Screw	4
-	WLI-2	. Lockwasher	4
4-21	M3530	Rubber grommet	1
4-22	M8582	Valve stop	1
4-23	M4966	Metering valve	1
4-24	M8508	Control mounting strap	1
4-25	M8578	Compression connector	1
4-26	69248	Connector, 90° male elbow, 1/8 in. pipe x 1/4 in. tube	1
4-27	M8607	Fuel intake line assembly (filter to pump)	1
4-28	M8540	Fuel line assembly (pump to regulator)	1
4-29	M8539	Fuel line assembly (regulator to metering valve)	1
4-30	M8541	Fuel line assembly (metering valve to burner head)	1
-	M8509	Motor, Transformer, Grille, Fan and Pump assembly	NP
-	ST3-4B	. Screw, Rd. hd. sheet metal, No. 10 x 1/2 in., blunt pt.	4
-	WLI-3	. Lockwasher	4
4-31	M8578	Connector, 1/4 in. tube x 1/8 in. pipe	1
4-32	1000513	Compression connector	1
4-33	M8247	Pump assembly	1
-	RC2-12	. Screw, Rd. hd. mach., No. 8-32 x 1-1/2 in.	4
-	WLM-2	Lockwasher, No. 8	4
4-34	M8244	Pump cover	1
4-35	M8445	Gasket	2
4-36	M8245	Pump body	1
4-37	M8258	Plunger	2
4-38	M8446	Pin	1
4-39	M8243	Rotor	1
-	ROP-8-8R	. Rollpin	2
4-40	M8444	Seal	1
4-41	M4502	Fan	1
4-42	M5232	Grille	1
4-43	M3501-3	Transformer	1
4-44	M8506	Motor	1
4-45	M8504	Outer shell assembly	1
-	RF3-8C	. Screw	2
4-46	M3586	Nipple, 1/2 in.	3
4-47	50460	Locknut	3
-	ST2-3	. Screw	1
4-48	M6627	Combustion chamber assembly	1
4-49	M5659	Cone	1
4-50	M5666	Perforated sleeve	1
-	STP2-3	. Screw	3
4-51	M6628	Combustion chamber	1
4-52	M8534	Burner plate assembly	1
-	STP2-3	. Screw	4
4-53	69248	Elbow, 90° male elbow, 1/8 in. pipe x 1/4 in. tube	1
4-54	NJF-8	Jam nut, 1/2-20	1
4-55	M5674	Fin assembly	1
4-56	M6638	Fuel distributing plate	1
4-57	M6643	Spacer	6
-	RC2-8SS	. Screw, Rd. hd. mach., No. 8-32 x 7/8 in., stainless steel	7
-	NPC-2	. Nut, hex, No. 8-32	7
4-58	M6656	Air turning vane assembly	1
4-59	M6600	Ceramic cloth pad	1
4-60	M8492	Support ring	1
4-61	M6606	Drip trough	1
4-62	M6653	Spacer	1
4-63	M6639	Gasket	1
4-64	M8585	Harness assembly (See figure 5 and Wiring Diagram, figure 2)	1
4-65	M8616	Fuel filter assembly	1
4-66	1000525	Drain plug	1
4-67	M8543	Connector, male, 1/4 in. pipe x 3/16 tube, compression	1
4-68	M8580	Connector, 90°, 1/4 in. pipe x 3/8 in. tube, compression	1
4-69	M3353	Filler neck cap	1
4-70	M8490	Fuel tank assembly	1

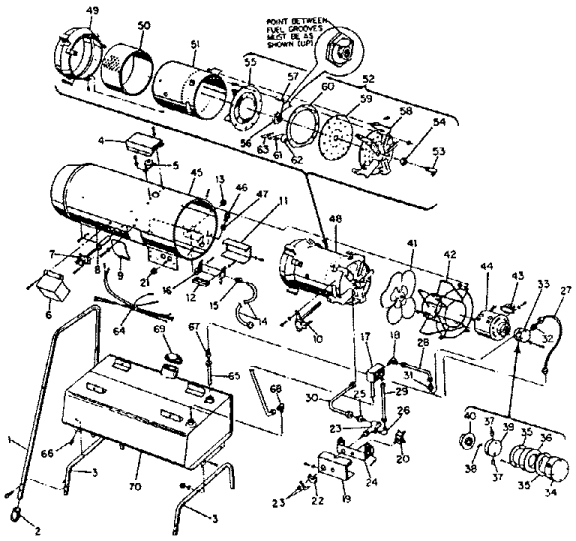

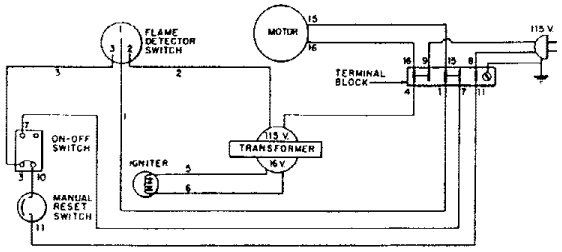

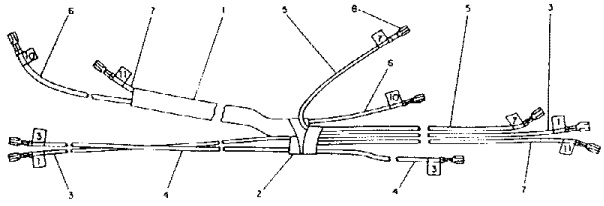

Wiring Harness Assembly

5-1	M6661-9	Tubing, Fiberglas, 14 in. long (Leads 10 and 11)	1
5-2	M8586	Tape, electrical, 6 in. long	1
5-3	M5052-30	Lead No. 1 assembly	1
5-4	M5052-32	Lead No. 3 assembly	1
5-5	M5052-33	Lead No. 7 assembly	1
5-6	M5052-28	Lead No. 10 assembly	1
5-7	M5052-29	Lead No. 11 assembly	1
5-8	M5136	Receptacle (AMP No. 41202)	1
-	M6661-7	Tubing, fiberglas, 7 in. long (Leads 5 and 6)	1